ART. - ITEM
05.0115P

Guida PROGRESSA push to open
Push to open PROGRESSA drawer slide

Guida push to open per cassetti con fianchi di spessore fino a 16 mm. Portata: 45kg. Da utilizzare con clip 05.0120C e leve di regolazione dell'inclinazione 05.0120LR (optional).
Push to open runner slide for drawers for side thicknesses up to 16 mm. Load capacity: 45kg. To be used with clip 05.0120C and adjustment lever 05.0120LR (optional)

DATI TECNICI/TECHNICAL DATA mm

L	250	300	350	400	450	500	550
KG	Kg45	Kg45	Kg45	Kg45	Kg45	Kg45	Kg45
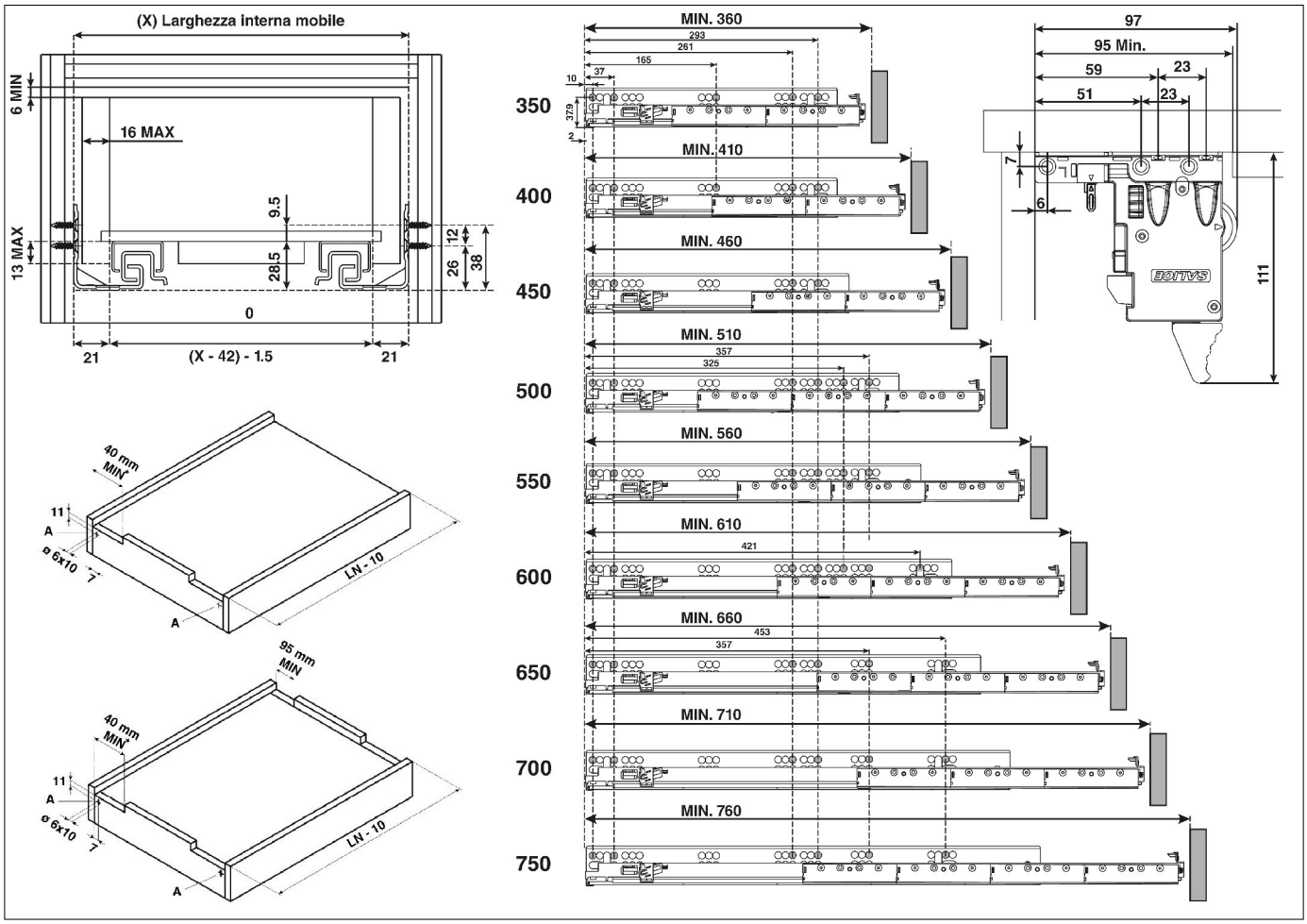
COD.	DESCRIZIONE / DESCRIPTION	
05.0115P25009	GUIDA PROGRESSA ESTR.TOT.PUSH 250 S/CLIP / DRAWER SLIDE PROGRESSA FULL EXT. 250mm	1
05.0115P30009	GUIDA PROGRESSA ESTR.TOT.PUSH 300 S/CLIP / DRAWER SLIDE PROGRESSA FULL EXT. 300mm	1
05.0115P35009	GUIDA PROGRESSA ESTR.TOT.PUSH 350 S/CLIP / DRAWER SLIDE PROGRESSA FULL EXT. 350mm	1
05.0115P40009	GUIDA PROGRESSA ESTR.TOT.PUSH 400 S/CLIP / DRAWER SLIDE PROGRESSA FULL EXT. 400mm	1
05.0115P45009	GUIDA PROGRESSA ESTR.TOT.PUSH 450 S/CLIP / DRAWER SLIDE PROGRESSA FULL EXT. 450mm	1
05.0115P50009	GUIDA PROGRESSA ESTR.TOT.PUSH 500 S/CLIP / DRAWER SLIDE PROGRESSA FULL EXT. 500mm	1
05.0115P55009	GUIDA PROGRESSA ESTR.TOT.PUSH 550 S/CLIP / DRAWER SLIDE PROGRESSA FULL EXT. 550mm	1