ART. - ITEM
05.4950

Meccanismo KIARO EASY

KIARO EASY opening system

KIARO EASY è il nuovo sistema di apertura a filo per ante a ribalta con peso e dimensioni ridotte. E' disponibile in 2 versioni predefinite. Forza SOFT e forza STRONG e permette la regolazione dell'angolo e della velocità di apertura dell'anta.

Kiaro Easy is our elegant opening system for drop down doors defined by minimalist shapes and a distinctly smooth movement. The unhanded mechanism is easily installed on the side panel and provides for the door opening with a slim yet extremely strong Dyneema wire. The result is a compact and well proportioned solution for smaller doors. Kiaro Easy is a universal mechanism that can be mounted on eiher side thus optimising stock management. The opening strengths of the mechanism can be easily activated with the help of the pre-mounted screw on the body and allow for a softer opening.

COD.	DESCRIZIONE / DESCRIPTION	
05.4950200040	COVER KIARO EASY BIANCO / COVER F.ADJUSTMENTS KIARO EASY WHITE	2
05.49502000EE	COVER KIARO EASY ANTRACITE / COVER F.ADJUSTMENTS KIARO EASY ANTHRACIT	2
05.49503500YQ	ATTACCO KIARO EASY A RIDOSSO NICHEL NERO / VISIBLE DOOR BRACKET W/COVER F. KIARO	2
05.49503510YA	ATTACCO KIARO EASY A RIDOSSO NIKEL/BIANC / CONCEALED DOOR BRACKET W/COVER F. KIARO	2
05.4950400040	MECCANISMO KIARO EASY SOFT 22-150 BIANCO / KIARO EASY OPENING SYSTEM SOFT WHITE	1
05.4950600040	MECCANISMO KIARO EASY STRONG 62-350 B/CO / KIARO EASY OPENING SYSTEM STRONG WHITE	1

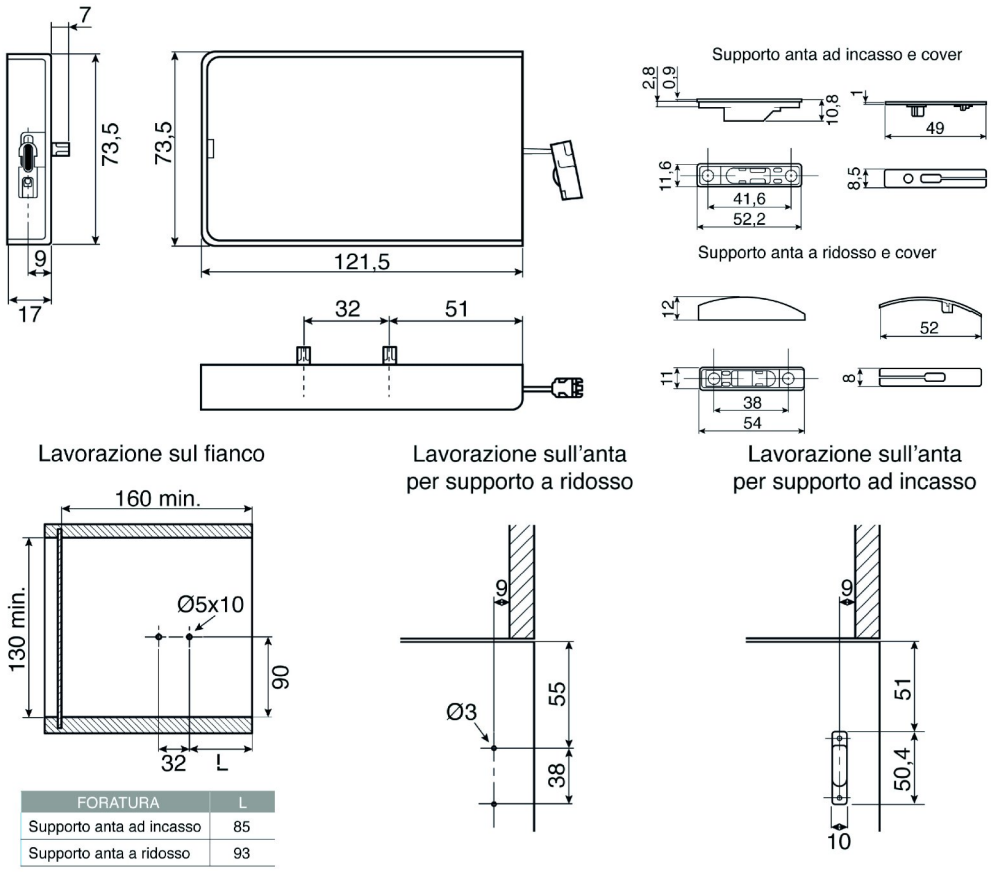

FORATURA	L
Supporto anta ad incasso	85
Supporto anta a ridosso	93